REFRIGERATION AVANTCO

User Manual

Commercial School Milk Cooler User's Manual

09/2017

Commercial School Milk Coolers:
178MC34HC, 178MC49HC, 178MC58HC

Please read the manual thoroughly prior to equipment set-up, operation and maintenance.

Warning

DANGER – RISK OF FIRE OR EXPLOSION. FLAMMABLE REFRIGERANT USED. TO BE REPAIRED ONLY BY TRAINED SERVICE PERSONNEL. DO NOT PUNCTURE REFRIGERANT TUBING.

DANGER – RISQUE DE FEU OU D'EXPLOSION. LE FRIGORIGÈNE EST INFLAMMABLE. CONFIER LES RÉPARATIONS À UN TECHNICIEN SPÉCIALISÉ. NE PAS PERFORER LA TUBULURE CONTENANT LE FRIGORIGENE.

CAUTION – RISK OF FIRE OR EXPLOSION. FLAMMABLE REFRIGERANT USED. CONSULT REPAIR MANUAL/OWNER'S GUIDE BEFORE ATTEMPTING TO SERVICE THIS PRODUCT. ALL SAFETY PRECAUTIONS MUST BE FOLLOWED.

ATTENTION – RISQUE DE FEU OU D'EXPLOSION. LE FRIGORIGÈNE EST INFLAMMABLE. CONSULTER LE MANUEL DU PROPRIÉTAIRE/GUIDE DE RÉPARATION AVANT DE TENTER UNE RÉPARATION. TOUTES LE MESURES DE SÉCURITÉ DOIVENT ÊTRE RESPECTÉES.

CAUTION – RISK OF FIRE OR EXPLOSION DUE TO PUNCTURE OF REFRIGERANT TUBING; FOLLOW HANDLING INSTRUCTIONS CAREFULLY. FLAMMABLE REFRIGERANT USED.

ATTENTION – RISQUE DE FEU OU D'EXPLOSION SI LA TUBULURE CONTENTANT LE FRIGORIGÈNE EST PERFORÉE; SUIVRE LES INSTRUCTIONS DE MANUTENTION AVEC SOIN. LE FRIGORIGÈNE EST INFLAMMABLE.

CAUTION – RISK OF FIRE OR EXPLOSION DUE TO FLAMMABLE REFRIGERANT USED. FOLLOW HANDLING INSTRUCTIONS CAREFULLY IN COMPLIANCE WITH LOCAL GOVERNMENT REGULATIONS.

ATTENTION – RISQUE DE FEU OU D'EXPLOSION SI LE FRIGORIGÈNE EST INFLAMMABLE. SUIVRE LES INSTRUCTIONS DE MANUTENTION AVEC SOIN CONFORMÉMENT AUX RÈGLEMENTATION GOUVERNEMENTALE LOCAUX.

Exploded Parts Diagram

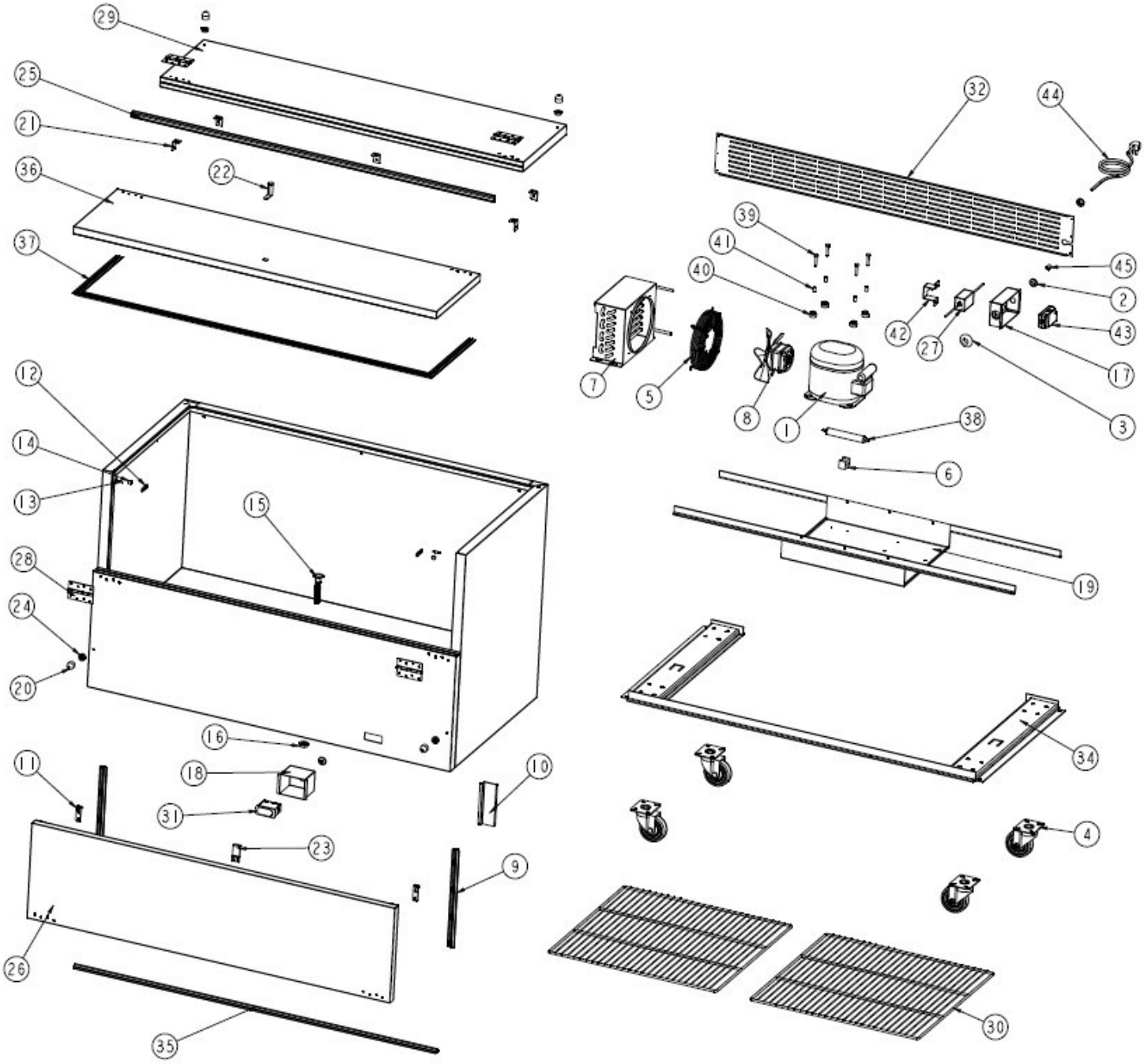

Item No.	Parts Name	CSP Part #
1	Compressor	17810635
2	Power cord protector 20	*
3	Power cord protector 33	*
4	Caster	17819301
	Caster with brake	17816412
5	Cover of condenser fan motor	*
6	Filter fixer	*
7	Condenser	17811611
8	Condenser fan motor	17819194
	Condenser Fan Blade	17814791
9	Front door gasket for MC34	178GSKT18747
	Front door gasket for MC49	178GSKT17662
	Front door gasket for MC58	178GSKT14156
10	Cover of temperature sensor	*
11	Clasper	*
12	Hook	*
13	Hook Axis	*
14	Cover of hook axis	*
15	Drain hose	*
16	Drain nut	*
17	Cover for junction box	*
18	Cover of Digital controller	*
19	Assembling panel of Compressor unit of MC34	*
	Assembling panel of Compressor unit of MC49	*
	Assembling panel of Compressor unit of MC58	*
20	Stopper 1	*
21	Right-angled connector	*
22	Lock	*
23	Lock Clasper	*
24	Stopper 2	*
25	Top lid gasket for MC34	178GSKT17075
	Top lid gasket for MC49	178GSKT11692
	Top lid gasket for MC58	178GSKT14968
26	Front door for MC34	*
	Front door for MC49	*
	Front door for MC58	*
27	Transformer	
28	Door connector	178HINGMC
29	Top lid for MC34	*
	Top lid for MC49	*
	Top lid for MC58	*
30	Shelf for MC34	*
	Shelf for MC49	*
	Shelf for MC58	*
31	Digital controller	17815350
32	Back grill for MC34	*
	Back grill for MC49	*
	Back grill for MC58	*
33	Cabinet	N/A
34	Supporter for assembling board	*
35	Bottom gasket for MC34	178GSKT19365
	Bottom gasket for MC49	178GSKT10903
	Bottom gasket for MC58	178GSKT19991
36	Top door for MC34	*
	Top door for MC49	*
	Top door for MC58	*
37	Top door gasket for MC34	178GSKT14381
	Top door gasket for MC49	178GSKT15094
	Top door gasket for MC58	178GSKT19480
38	Filter	*
39	Screw	*
40	Compressor pad	*
41	Compressor pad sleeve	*
42	Transformer Fixer	*
43	Junction box	*
44	Power cord	*
45	Clip for power cord	17810175

*Consult Factory for Part Number

Please read this manual thoroughly prior to equipment set-up, operation and maintenance.

Inspection

When the equipment is received, all items should be carefully checked against the bill of landing to insure all crates and cartons have been received. All units should be inspected for concealed damage by uncrating the units immediately. If any damage is found, it should be reported to the carrier at once, and a claim should be filed with the carrier. This equipment has been inspected and tested in the Avantco Refrigeration. Facility and has been crated in accordance with transportation rules and guidelines. Manufacturer is not responsible for freight loss or damage.

Installation

GENERAL

Take care when removing the skid, so that it will not damage the cooler's finish. Do not tip cabinet to install casters or legs. Insure that the casters or legs are screwed all the way into the base.

LOCATION

The self contained refrigeration system located at the bottom of the cabinet requires free air access for proper operation. The back of the cabinet may be positioned against a wall, however, there must be a minimum four inch clearance between the sides and a wall. It is necessary to properly level cooler to provide adequate drainage and efficient functioning of the unit.

ELECTRICAL

Check the proposed outlet to be used to insure that the voltage, phase, and current carrying capacity of the circuit from the electrical panel correspond to the requirements of the cabinet. Plug all standard models into a 110 volts A.C.60 cycle outlet. NEVER use an extension cord to power any unit. All wiring between the electrical panel and the unit must be done in accordance with the National Electric Code and all state and local codes. Refer to the Serial Tag for all pertinent electrical information.

General Operation

The milk coolers are cooled entirely by convection as a result of copper coils completely encircling the perimeter of the storage compartment. During the refrigeration process, heat is removed through the evaporator tubing and expelled through the condensing unit. It is important that the flow of air through the side louvers is not restricted in order to ensure the condensing unit operates properly. Under normal operating conditions, any frost that might accumulate on the walls during the “on” cycle of the condensing unit may melt during the “off” cycle. Drains are installed in all milk coolers to accommodate melting frost.

Adjusting the Temperature

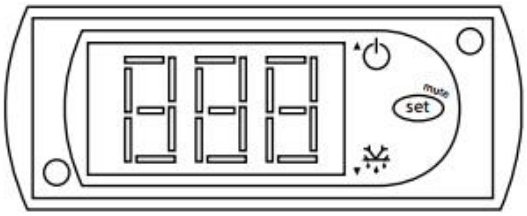

Your new refrigerator or freezer is already factory-set to run at optimum temperatures for food safety and should require no adjustments.

Refrigerators are set to cycle between a minimum temperature of 33 degrees Fahrenheit and a maximum temperature of 40 degrees Fahrenheit.

Freezers are set to cycle between a minimum temperature of -5 degrees Fahrenheit and a maximum temperature of 2 degrees Fahrenheit.

Adjusting the temperature changes the **minimum** temperature your unit will run at. Your unit will not run constantly at this setting. To change it, follow these instructions:

Digital Control Units

- Hold “SET” for 1 sec. The display will flash the current minimum temperature.
- Use the arrow buttons to adjust the minimum temperature you want it to run at.
- Press “SET” again to save your settings

Always remember to calculate the differential if you change the minimum temperature setting. The cabinet temperature will fluctuate up to +7 degrees over your set minimum temperature as the compressor runs and shuts off. Setting the temperature too high will result in unsafe maximum temperatures and possible health code violations.

Running a Manual Defrost Cycle

Units are pre-programmed to run automatic defrost cycles at preset intervals. However, if you would like to run a manual defrost cycle at any time, please follow the steps below:

1. Press the defrost button (snowflake symbol and down arrow) for approximately 3 seconds.
2. Repeat to stop the defrost cycle.

General Maintenance

PERIODIC CLEANING

Beginning with the initial installation, the interior surfaces of the cabinet should be periodically wiped down with a solution of warm water and baking soda. This solution will remove any odors from spillage that has occurred. The exterior of the cabinet should also be cleaned frequently with a commercial grade glass cleaner or with mild soap and water. Never, under any circumstances, use an abrasive cleaner or alkaline solution.

Monthly cleaning of the condenser will aid the heat transfer characteristics of the refrigeration system and increase its efficiency. To accomplish this, remove the louvered panel from the cabinet and use a wire brush to loosen any dirt particles that are attached to the fins. After this is accomplished, use a vacuum cleaner to remove the loosened particles.

Troubleshooting

Compressor Will Not Start, No Hum

Service cord unplugged	Plug in service cord
Fuse blown or removed	Determine reasons and correct
Control stuck open	Repair or replace
Wiring incorrect	Check wiring against the diagram

Compressor Will Not Start, Hums but Trips Overload Protector

Improperly wired	Check against the wiring diagram
Low voltage to unit	Determine the reason and correct
Starting capacitor defective	Determine the reason and replace
Relay failing to close	Determine the reason, correct or replace

Compressor Starts & Runs but Short Cycles on Overload Protector

Low voltage to unit	Determine the reason and correct
Overload defective	Check current, replace overload protector
Excessive head pressure	Check ventilation or restriction in refrigeration system
Compressor hot-return gas hot	Check refrigeration charge, fix leak if necessary

Warranty Information

Limited Service Warranty - Valid only in the United States

1 Year Parts and Labor Warranty

Unless otherwise stated, Avantco Refrigeration warrants to the original purchaser of new Avantco Refrigeration units (and all parts thereof), that such equipment will be free from defects in material and workmanship for a period of 1 year from the date of delivery.

5 Year Compressor Warranty

In addition to the 1 year parts and labor warranty above, Avantco Refrigeration warrants the compressor on select units to be free of defects in material and workmanship for a period of 5 years from the date of delivery. This additional warranty appliesto the following product series:

UBB, UDD, PICL, SCL, MC, JBC, GDC, CFD, CBE, SSPT, APT, APPT, SS, HBB, GF, A-Series

On products without the 5 year compressor warranty, the compressor is covered for 1 year under the standard parts and labor warranty.

What This Warranty Does Not Cover:

Avantco Refrigeration will not warrant coverage for component failure or other damages that arise under the following conditions:

- Failure to install and/or use the unit within proper operating conditions specified by Avantco Refrigeration.
- Failure to properly maintain the unit. This includes, but is not limited to, basic preventative maintenance like cleaning the condenser coil.
- Installation in non-commercial or residential applications.
- Products sold or used outside of the United States.
- Any damage that occurs as a result of negligence or improper handling.
- Overloading or improper loading of the unit in a manner that prevents proper airflow.

Additionally, no claims can be made against this warranty for spoilage of products, loss of sales or profits, or any other consequential damages.

Normal wear type parts, such as light bulbs and gaskets, are not included in warranty coverage.

For Warranty Inquiries or Service:

This warranty is only valid on equipment purchased from an authorized dealer. A list of authorized dealers for your state can be found by going to avantcorefrigeration.com.

- Locate the model number (located on the front of the unit, or inside the door jamb).
- Locate the bold number on the service plate (located on the front of the unit).

Next, call 1-800-678-5517. You must have the model number and service plate number when contacting service technicians.

Failure to contact Avantco Refrigeration prior to obtaining equipment service may void your warranty.